Mathematics Assessment Project

Formative Assessment Lesson Materials

Applying Angle Theorems

MARS Shell Center
University of Nottingham & UC Berkeley
Beta Version

If you encounter errors or other issues in this version, please send details to the MAP team c/o map.feedback@mathshell.org.

© 2011 MARS University of Nottingham

Applying Angle Theorems

Mathematical goals

This lesson unit is intended to help you assess how well students are able to use geometric properties to solve problems. In particular, it will support you in identifying and helping students who have the following difficulties:

- Solving problems relating to using the measures of the interior angles of polygons.
- Solving problems relating to using the measures of the exterior angles of polygons.

Common Core State Standards

This lesson involves *mathematical content* in the standards from across the grades, with emphasis on:

G-SRT: Prove theorems involving similarity.

This lesson involves a range of *mathematical practices*, with emphasis on:

3. Construct viable arguments and critique the reasoning of others.
7. Look for and make use of structure.

Introduction

The lesson unit is structured in the following way:

- Before the lesson, students work individually to complete an assessment task that is designed to reveal their current understandings and difficulties.
- During the lesson, students work in pairs and threes on a collaborative discussion task. They are shown four methods for solving an angle problem, and work together to complete the problem using each of the methods in turn. As they do this, they justify their work to each other.
- Working in the same small groups, students analyze sample solutions to the same angle problem produced by students from another class. They identify errors and follow reasoning in the sample solutions.
- There is then a whole-class discussion in which students explain the reasoning in the sample solutions and compare the methods.
- Finally, students return to their original task, and try to improve their own responses.

Materials required

- Each individual student will need two copies of the assessment task *Four Pentagons,* and a copy of the lesson task *The Pentagon Problem*.
- Each small group of students will need a copy of each of the *Sample Responses to Discuss,* and a copy of the *Geometrical Definitions and Properties* sheet.
- There are some projectable resources to support discussion.

Time needed

Approximately fifteen minutes before the lesson for the assessment task, and a one-hour lesson. All timings are approximate. Exact timings will depend on the needs of the class.

© 2011 MARS University of Nottingham

Before the lesson

Assessment task: *Four Pentagons* (15 minutes)

Have the students do this task in class or for homework a day or more before the formative assessment lesson. This will give you an opportunity to assess the work and to find out the kinds of difficulties students have with it. Then you will be able to target your help more effectively in the follow up lesson.

Give out the assessment task *Four Pentagons*. Introduce the task briefly and help students to understand the problem and its context.

Ask students to attempt the task on their own, without discussion.

> *Don't worry if you cannot understand everything, because there will be a lesson on this material [tomorrow] that will help.*
>
> *By the end of the next lesson, you should expect to be more confident when answering questions like these.*

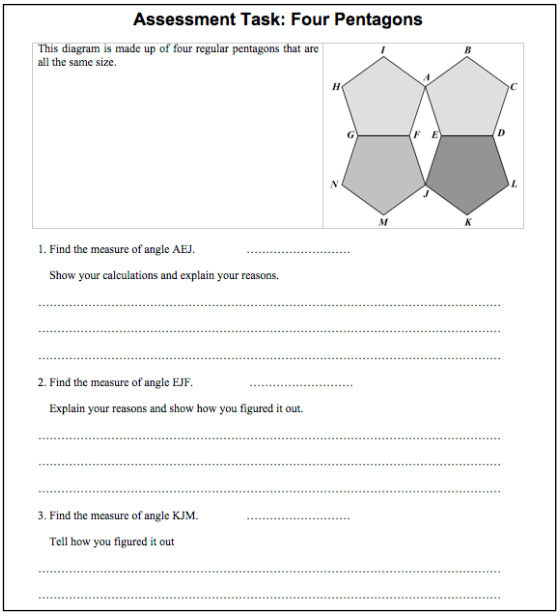

Assessment Task: Four Pentagons

This diagram is made up of four regular pentagons that are all the same size.

1. Find the measure of angle AEJ. .....

Show your calculations and explain your reasons.

.....

.....

.....

2. Find the measure of angle EJF. .....

Explain your reasons and show how you figured it out.

.....

.....

.....

3. Find the measure of angle KJM. .....

Tell how you figured it out

.....

.....

Assessing students' responses

Collect students' responses to the task and read through their papers. Make some notes on what their work reveals about their current levels of understanding, and their different problem solving approaches. The purpose of this is to forewarn you of issues that will arise during the lesson itself, so that you may prepare carefully.

We suggest that you do not score students' work. The research shows that this will be counterproductive, as it will encourage students to compare scores, and distract their attention from what they can do to improve their mathematics. Instead, help students to make further progress by summarizing their difficulties as a series of questions. Some suggestions for these are given on the next page. These have been drawn from common difficulties observed in trials of this lesson unit.

We suggest that you write a list of your own questions, based on your students' work, using the ideas below. You may choose to write questions on each student's work. If you do not have time to do this, select a few questions that may be of help to the majority of students. These can be written on the board at the end of the lesson.

© 2011 MARS University of Nottingham

Common issues:	Suggested questions and prompts:
Student has difficulty in getting started The student writes little in response to any of the questions.	• *Write what you know about this diagram.* • *How might that information be useful?* • *What else can you calculate?*
Student makes arithmetic errors. For example: The student writes, "Angle EJF = 180° − 144 = 46°."	• *How can you be sure your answer is correct?*
Student uses an incorrect formula For example: The student does not identify the correct formula to use to find the interior angle of a pentagon (Q1).	• *Find the correct formula for the interior angle of a regular pentagon.* • *What does n stand for in this formula?*
Student produces a partially correct solution For example: The student does not follow through the method she has written down. Or: The student calculates 540° but does not find interior angle. Or: The student calculates 108° or 216° but does not find angle AEJ.	• *You have given an answer of [216°]. Which angle is this on the diagram? What do you need to do to complete your solution?*
Student uses unjustified assumptions For example: The student argues that supplementary angles sum to 180° without first establishing that the figure is a rhombus.	• *The angles in a parallelogram are supplementary, but how do you know that this is a parallelogram?*
Student provides poor reasoning For example: The student calculates using a theorem but does not state what the theorem is.	• *How do you know that this is the correct calculation to perform?* • *Would someone reading your solution understand why your answer is correct?*
Student produces a full solution The student provides a full and well-reasoned solution, and has justified all assumptions.	• *Find another way of solving each part of the Four Pentagons problem.*

© 2011 MARS University of Nottingham

Suggested lesson outline

Collaborative problem solving: *The Pentagon Problem* (20 minutes)

Organize students into small groups of two or three. Give each group a copy of *The Pentagon Problem* and a copy of the *Geometrical Definitions and Properties* sheet.

Display the slide *Instructions for The Pentagon Problem (1)*. Introduce the task and explain what you are asking students to do.

> *Mrs. Morgan is a teacher in another school. She wrote this problem on the board for her students.*
>
> *I'm giving you some work written by four of her students.*
>
> *The students all used different methods to solve the problem.*
>
> *I want you to use each student's method in turn to solve The Pentagon Problem.*

The Pentagon Problem

Mrs. Morgan wrote this problem on the board:

This pentagon has three equal sides at the top and two equal sides at the bottom.

Three of the angles have a measure of 130°.

Figure out the measure of the angles marked x, and explain your reasoning.

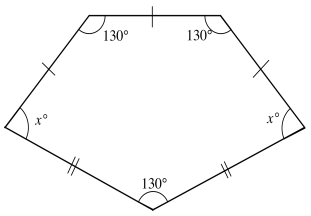

Diagram is not accurately drawn.

Four students in Mrs. Morgan's class came up with different methods for answering this problem. Their methods are shown below.

Use each student's method to calculate the measure of angle x.
Write down all your reasoning in detail.

Use the *Geometrical Definitions and Properties* sheet to help.

Display the slide, *Instructions for The Pentagon Problem (2).*

> *To get started, choose one of the methods and work together to produce a solution. Make sure everyone in your group understands how that method works. Then move on to the next method.*
>
> *Write all your reasoning in detail, and make sure you justify every step.*

As students work, you have two tasks, to note student difficulties, and to support student problem solving.

Note student difficulties

Look for difficulties students have with particular solution methods. Which solution method(s) do they find it most difficult to interpret and use? What is it that they find difficult? Notice also the ways they justify and explain to each other. Do they justify assumptions? Do they explain all their calculations with reference to theorems and definitions? You can use this information to focus whole-class discussion towards the end of the lesson.

Support student problem solving

Try not to focus on numerical procedures for deriving answers. Instead, ask students to explain their interpretations of and use of the different methods. Raise questions about their assumptions and prompt for explanations based in angle theorems to encourage precision in students' reasoning. Refer them to the *Geometrical Definitions and Properties* sheet as needed.

Collaborative analysis of *Sample Responses to Discuss* (15 minutes)

As students complete their solutions, give each group a copy of each of the four *Sample Responses to Discuss*.

> *Four students in another class used Annabel, Brian, Carlos and Diane's methods to solve the problem like you just did.*
>
> *Here are copies of the other students' work.*
>
> *None of this work is perfect!*
>
> *For each student's solution:*
>
> *Explain whether the reasoning is correct and complete.*

Correct the method when necessary.

Use the method to calculate the measure of the missing angle x, giving detailed reasons for all your answers.

During small-group work, note student difficulties and support student problem solving as before. In particular, think about what students are finding most difficult, and use this to focus the next activity, whole-class discussion.

Plenary whole-class discussion: comparing solution methods (15 minutes)

Organize a whole-class discussion comparing the sample solutions methods. There are some projectable resources showing the *Sample Responses to Discuss* to help with this discussion.

Using your understanding of your students' difficulties from the assessment task and their work during the lesson, choose one of the sample responses to discuss. Ask one group to present their analysis of that response. Ask for comments and reactions from other students.

[Celia] What went wrong in Megan's solution?

Why did Brian draw that line?

Can you explain what assumption Katerina made? Was it a correct assumption?

[Trevor] Can you explain that in another way?

Then look at another solution method.

Finally, compare methods.

Which student's work provided the most complete reasoning?

Which student's work was most difficult to understand?

The intention is, that students will begin to realize the power of using different methods to solve the same problem, and to appreciate the need for, and nature of, adequate reasons for each assertion.

Improve individual responses to the assessment task (10 minutes)

Return students' work on *Four Pentagons* along with a fresh copy of the assessment task sheet.

If you did not write questions on students' solutions, display them on the board.

Ask students to read through their responses, bearing in mind what they have learned during this lesson.

Look at your original responses, and think about what you have learnt this lesson.

Using what you have learned, try to improve your work.

If you do not have time during the lesson, you could set this in a follow up lesson, or for homework.

© 2011 MARS University of Nottingham

Solutions

We give examples of some approaches taken by students in trials. There are other methods that lead to correctly reasoned solutions.

Assessment task: *Four Pentagons*

1. The measure of angle AEJ is 144°.

Explanation 1:

The sum of the measures of the interior angles of an n-gon is $180°(n - 2)$.

For a pentagon this is $180° \times 3 = 540°$.

The pentagons are regular, so all their interior angles are congruent.

Each interior angle of a regular pentagon is $540° \div 5 = 108°$.

The sum of the angles forming a straight line is 180°.

Each exterior angle of a regular pentagon is $180° - 108° = 72°$.

Angle AEJ is twice the exterior angle of the pentagon = 2 x 72° = 144°

Explanation 2:

Angle AEF is an exterior angle of a regular pentagon, as is angle FEJ.

The sum of the exterior angles of a polygon is 360°.

There are five congruent exterior angles in a regular pentagon, each of measure $360 \div 5 = 72°$.

So AEJ = AEF + FEJ = 72 + 72 = 144°.

2. The measure of angle EJF is 36°.

Explanation 1:

Since consecutive angles of a parallelogram are supplementary, angle EJF = $180° - 144 = 36°$.

Explanation 2:

The sum of the interior angles of the quadrilateral AFJE is 360°.

Since the four pentagons are regular and congruent, sides AF, AE, EJ, JF are equal in length.

So AEJF is a rhombus.

Opposite angles in a rhombus are congruent.

From part 1, angle AEJ = 144° = AFJ.

The sum of the angles in a quadrilateral is 360°.

$360 - 2 \times 144 = 72°$.

FJE = FAE = $\frac{1}{2} \times 72 = 36°$.

3. The measure of angle KJM is 108°.

Explanation:

The sum of the measures of the four angles around the point J is 360°.

The measure of each of the interior angles of a regular pentagon is 108°, and angle EJF is 36° from Question 2.

Angle KJM = $360° - (36° + 2 \times 108°) = 108°$.

© 2011 MARS University of Nottingham

From this diagram, we can see that regular pentagons and rhombuses together form a semi-regular tessellation that can be used, for example, as a floor or wall tiling.

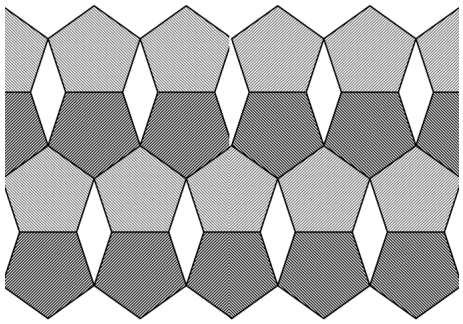

Lesson task: *The Pentagon Problem*

Each method gives a way of calculating the measure of angle *x,* 75°. Each method uses different definitions and angle properties in the explanation.

1. Annabel's method

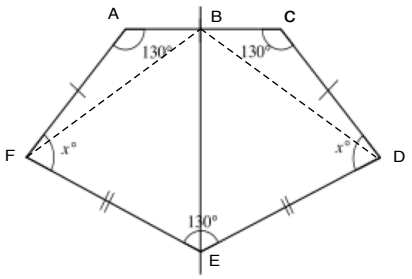

In trials, some students did not understand the need to justify the assumption that the line "down the middle of the pentagon" bisects the 130° angle at the base of the pentagon.

The construction line divides AC into segments of equal length.

So AB = BC.

AF = CD is given.

Angle BAF is congruent to angle BCD.

So by SAS, triangles ABF and BCD are congruent.

Triangle BFE is congruent to triangle BDE by SSS.

So angle FEB = angle BED = $\frac{130}{2} = 65°$.

To show that the two quadrilaterals ABEF and BCDE are congruent:

The sides are all congruent as BA= BC, AF = CD, FE = DE, and BE is common to both quadrilaterals.

The angle between sides AB and AF is congruent to the angle between sides BC and CD.

The angle between sides AF and FE is congruent to the angle between sides and DE.

So the quadrilaterals are congruent.

The figure is therefore symmetrical. So angle ABE = angle CBE = 90°.

Since the sum of the angles in a quadrilateral is 360°, $x = 360 - (90 + 130 + 65) = 75°$.

2. Carlos's method

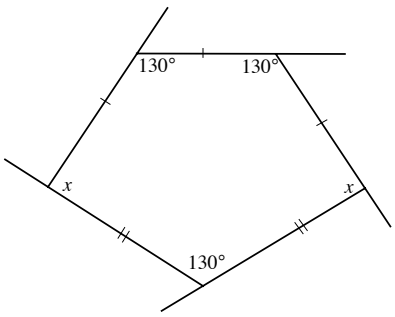

In trials, some students made the false assumption that all the exterior angles are congruent.

The sum of an interior and an exterior angle is 180°.

Three of the angles of the pentagon are known; all three are 130°.

The exterior angle for each of these interior angles is 180 – 130 = 50°.

The sum of the exterior angles of a polygon is 360°.

$360 - 3 \times 50 = 360 - 150 = 210°$.

This is the sum of the two missing exterior angles.

The two missing interior angles are congruent.

$x = 180 - \frac{1}{2} \times 210 = 180 - 105 = 75°$.

3. Brian's method

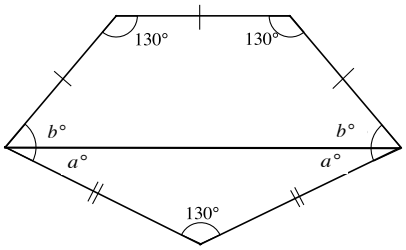

The pentagon is divided into a quadrilateral and a triangle.

In trials, some students did not understand the need to justify the claim that the quadrilateral is a trapezoid, and others did not understand the need to show that both triangle and trapezoid are isosceles.

The triangle is isosceles because it has two congruent sides. So the angles marked a are congruent. So the angles marked $b = x - a$ are also congruent to each other.

The quadrilateral is an isosceles trapezoid because the two slant sides are congruent and meet the horizontal side at congruent angles.

It follows that the base is parallel to the top, and angles marked b are also congruent.

The angles in a triangle sum to 180°.

$2a = 180 - 130 = 50$.

$a = 25°$.

The angles in a quadrilateral sum to 360°.

$2b = 360 - 2 \times 130 = 100$.

$b = 50°$.

Alternatively, since the top and base of the trapezoid are parallel, the angles b and 130° are supplementary, and $b = 180 - 130 = 50°$.

4. Diane's method

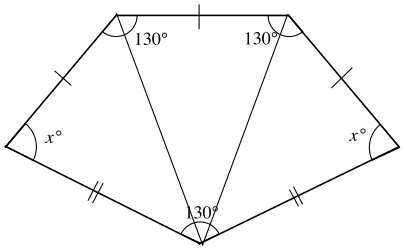

Some students in trials, perhaps relying on the appearance of the diagram, assumed the three triangles were all isosceles.

Diane shows the pentagon divided into three triangles. The sum of the angles in any triangle is 180°. The sum of the angles in the pentagon is thus $180 \times 3 = 540°$.

The three known angles are all 130°.

The two unknown angles are congruent.

$2x = 540 - 3 \times 130 = 150°$

$x = 75°$.

The outer triangles are not isosceles.

Analysis of *Sample Responses to Discuss*

Erasmus used Annabel's method

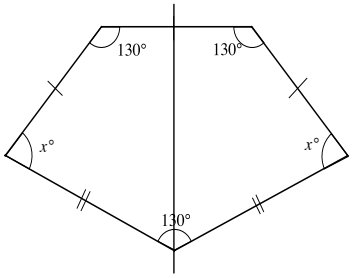

Erasmus does not justify the claim that the perpendicular bisector of the horizontal side divides the 130° into two equal parts. He could do this by

showing that the pentagon is symmetrical so that the bisector of the vertical side passes through the opposite vertex.

He also needs to explain that the perpendicular bisector then divides the pentagon into two congruent quadrilaterals. Then he can apply the property that the sum of the angles in a quadrilateral sum to 360°.

His calculation method is correct but he did not finish his working out.

Erasmus's use of Annabel's method gives the correct measure of $x = 75°$.

Tomas used Carlos's method

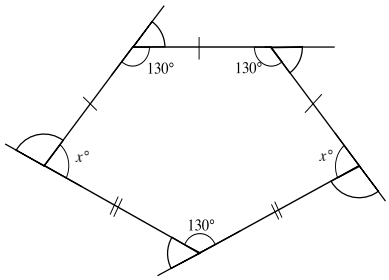

Tomas makes a false assumption that all the exterior angles are congruent.

He did not notice that the pentagon is not regular. The exterior angles are all congruent only when the polygon is regular.

Tomas should calculate the size of the exterior angles for each of the known 130° interior angles first.

The angles on a line sum to 180°, so there are three exterior angles of 50°.

$360 - 3 \times 50 = 360 - 150 = 210°$.

So, the two missing exterior angles are congruent and sum to 210°. Each is $210 \div 2 = 105°$.

Then, since the angles on a line sum to 180°, $x + 105 = 180$. So $x = 75°$

Katerina used Brian's method

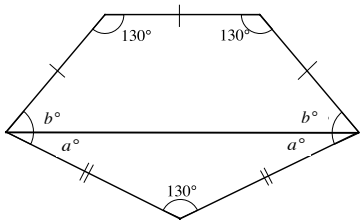

Katerina is correct that a trapezoid and triangle are formed by the horizontal line, but she does not fully explain her reasoning. It is not clear that the quadrilateral is a trapezoid, or that the trapezoid is isosceles.

She needs to show the base of the quadrilateral is parallel to the top to show that the quadrilateral is a trapezoid.

The horizontal side has at each end the same angle. The slant sides are the same length. So the line joining the ends of those slant sides is parallel to the top (trapezoid).

The trapezoid is isosceles because the slant sides are equal in length and joined to the top by congruent angles (symmetry). So both base angles can be labeled b.

She is correct that the triangle is isosceles because it has two congruent sides. So the two unknown angles in the triangle are congruent and can both be labeled a.

Katerina made a numerical error in stating $a = 50°$.

The angles in a triangle sum to 180°.

$2a = 180 - 130 = 50°$

She had forgotten to divide by two.

Katerina's next piece of reasoning is faulty.

It is not true that the consecutive angles in every quadrilateral sum to 180°. For example, it is not true that any two consecutive angles in a trapezoid always sum to 180°.

In a trapezoid, the angles formed by a transversal crossing the parallel sides forms a pair of supplementary angles.

Supplementary angles sum to 180°.

So $b = 180 - 130 = 50°$

Katerina also needs to finish her solution by finding
$x = a + b = 25 + 50 = 75°$

Megan uses Diane's method

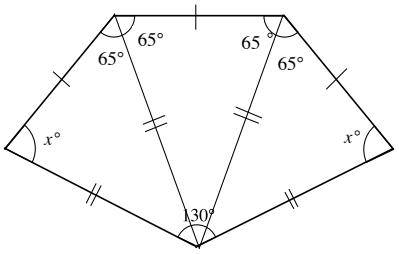

Diana divided the pentagon into three triangles to calculate the measure of x. There is not enough detail to specify a method.

Megan uses faulty reasoning with Diane's trisection.

She makes a false assumption that the triangles are all isosceles.

Megan would need to give reasons to support the assertion that the triangles are isosceles, and there are none beyond surface appearance since they are not!

Diane's trisection method can lead to a correct solution. The sum of the angles in a triangle is 180°.

So the total angle sum of the pentagon is $3 \times 180 = 540°$.

This could be provide using the formula for the sum of the angles in a polygon with n sides, $180(n - 2)$.

The interior angles sum is 540 and there are three known angles of 130°.
So $2x = 540 - 3 \times 130$, and $x = 75°$.

In Q4, it is not expected that students will show that Megan's assumption is false. However, we supply a solution in case you want to work on this with students.

Assuming that the triangles are isosceles leads to a contradiction, showing that the assumption is false. (Proof by contradiction.)

Megan assumes the three triangles formed are all isosceles triangles with two congruent base angles of 65°. Suppose she is correct.

Each has base line of equal length, the base angles of equal measure, two sides of equal length, the apex angles must also be congruent to each other, and the triangles are thus congruent.

Each apex angle would be $130 \div 3 = 43\frac{1}{3}°$.

Since the triangles are isosceles, and the angles in a triangle sum to 180°, the two base angles are

$(180 - 43\frac{1}{3}) \div 2 = 68\frac{1}{3}°$.

x cannot be both $68\frac{1}{3}°$ and 65°. The assumption leads to a contradiction, and must be false.

Four Pentagons

This diagram is made up of four regular pentagons that are all the same size.

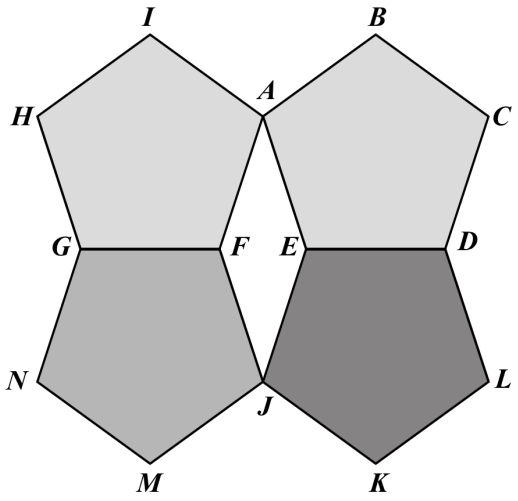

1. Find the measure of angle AEJ.

   Show your calculations and explain your reasons.

2. Find the measure of angle EJF.

   Explain your reasons and show how you figured it out.

3. Find the measure of angle KJM.

   Explain how you figured it out.

© 2011 MARS University of Nottingham

The Pentagon Problem

Mrs. Morgan wrote this problem on the board:

This pentagon has three equal sides at the top and two equal sides at the bottom.

Three of the angles have a measure of 130°.

Figure out the measure of the angles marked x, and explain your reasoning.

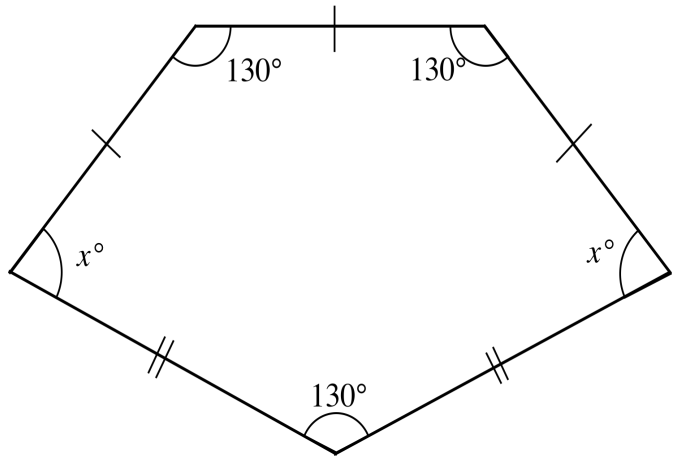

Diagram is not accurately drawn.

Four students in Mrs. Morgan's class came up with different methods for answering this problem. Their methods are shown below.

Use each student's method to calculate the measure of angle x.
Write all your reasoning in detail.

Use the *Geometrical Definitions and Properties* sheet to help.

© 2011 MARS University of Nottingham

1. **Annabel** drew a line down the middle of the pentagon.

She calculated the measure of x in one of the quadrilaterals she had made.

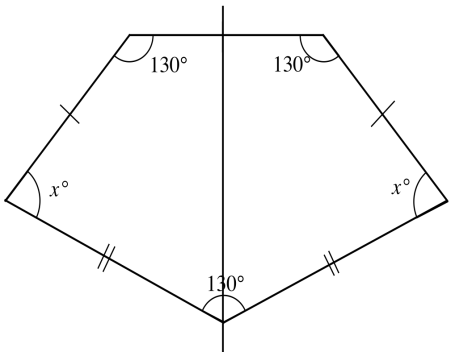

2. **Carlos** used the exterior angles of the pentagon to figure out the measure of x.

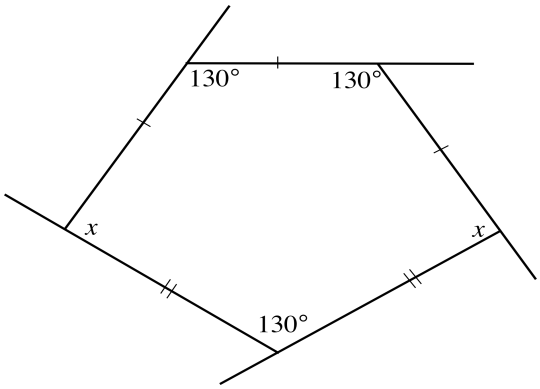

© 2011 MARS University of Nottingham

3. **Brian** drew a line that divided the pentagon into a trapezoid and a triangle.

Angle x has also been cut into two parts so he labeled the parts a and b.

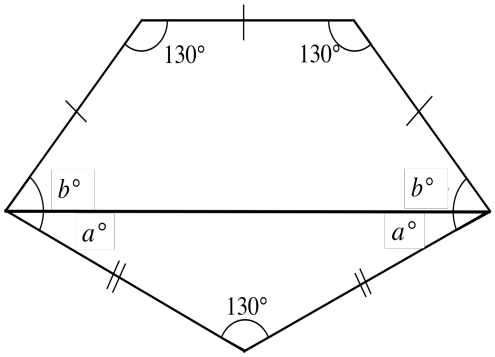

4. **Diana** divided the pentagon into three triangles to calculate the measure of x.

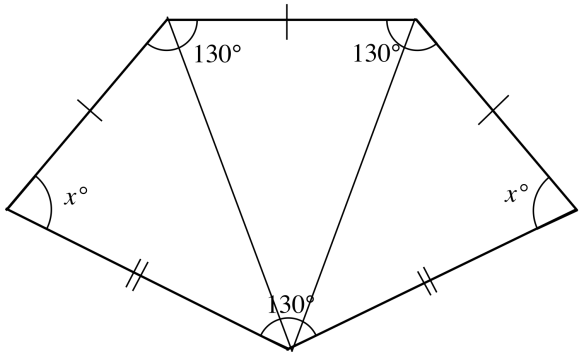

© 2011 MARS University of Nottingham

Sample Responses to Discuss

Four students in another class answered *The Pentagon Problem* using Annabel, Carlos, Brian and Diana's methods.

Their solutions are shown below.

For each piece of work:

- Explain whether the student's reasoning is correct and complete.
- Correct the solution if necessary.
- Use the method to calculate the measure of angle *x*.
- Make sure to write down all your reasoning in detail.
- Use the *Geometrical Properties* sheet to help.

Erasmus

Erasmus used Annabel's method

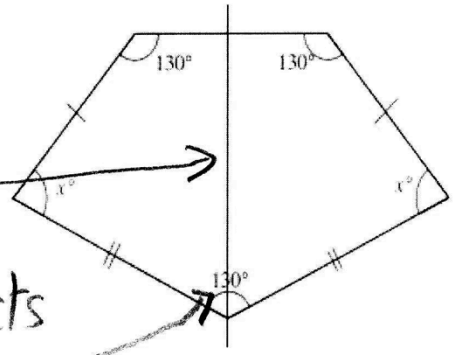

If you draw a perpendicular line down the middle it bisects the angle.

Angles in quadrilateral $130 + \frac{1}{2} \times 130 + x + 90 = 360$

Tomas

Tomas used Carlos's method

Exterior angles sum to 360°

$\frac{360}{5}$

$360 \div 5 = 72$

Angles on a line sum to 180°

$72 + x = 180$

$x = 180 - 72$

$x = 108°$

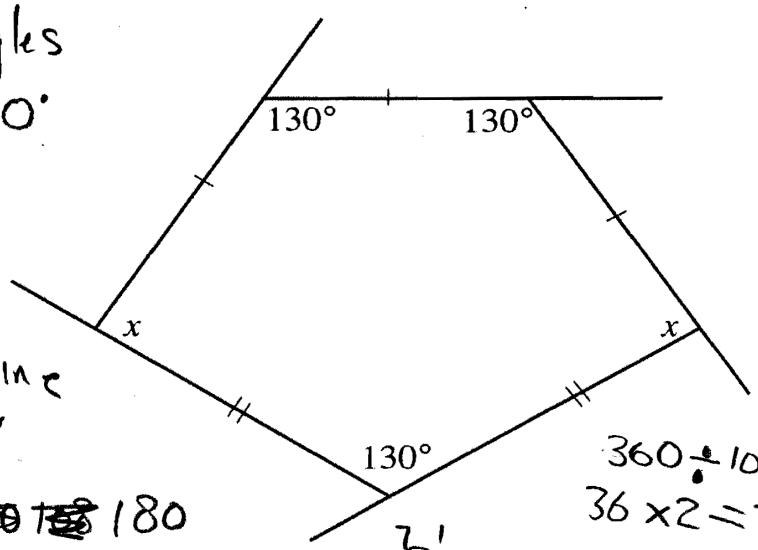

$360 \div 10 = 36$

$36 \times 2 = 72$

$$\begin{array}{r} 180 \\ 72 \\ \hline 108 \end{array}$$

Katerina

Katerina used Brian's method

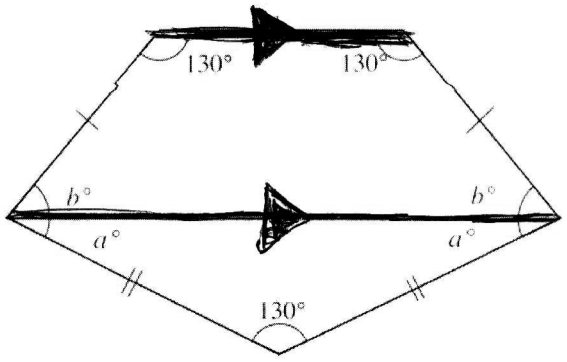

The horizontal line across makes a trapezoid and a triangle.

The triangle is isosceles because two sides are equal. 180 − 130 = 50°

Consecutive angles in a quadrilateral add to 180°. 180 − 130 = 50°.

Megan

Megan used Diane's method

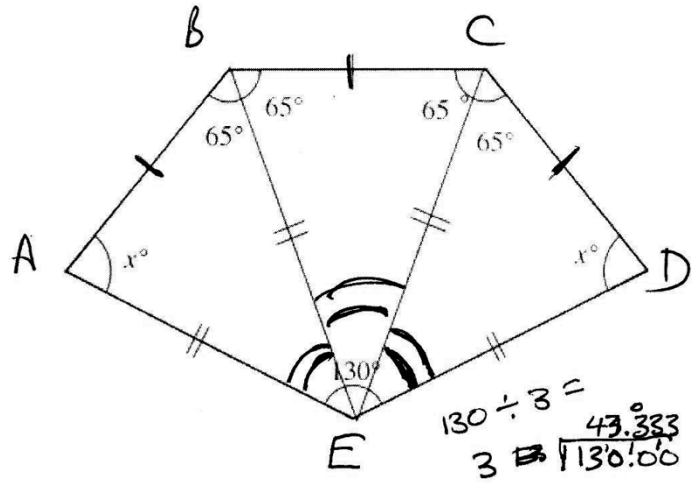

Divide the pentagon into 3 triangles.
They are all isosceles triangles because AB = BC = CD and AE = BE = CE = DE.
$x = 65°$ because angle $E\hat{A}B$ = angle $E\hat{B}A$.

Geometrical Definitions and Properties

Isosceles Triangle 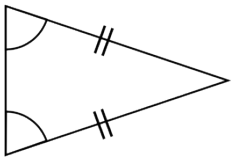 An isosceles triangle has at least two congruent angles and at least two congruent sides.	**Trapezoid** A trapezoid is a quadrilateral with at least one pair of parallel sides. 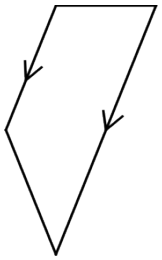	**Regular Polygon** 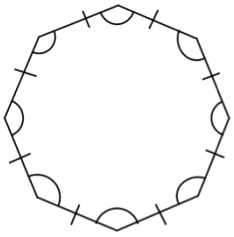 All interior angles of a regular polygon are congruent. Sides are all congruent.
Isosceles Trapezoid 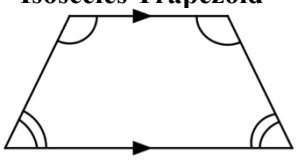 An isosceles trapezoid has two pairs of congruent angles. The slant sides are congruent.	**Angles on a Straight Line** 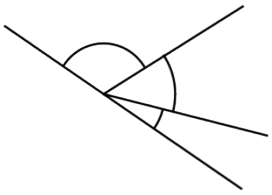 Angles forming a straight line sum to 180°.	**Corresponding Angles** 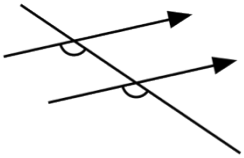 Corresponding angles formed by a transversal crossing a pair of parallel lines are congruent.
Supplementary Angles 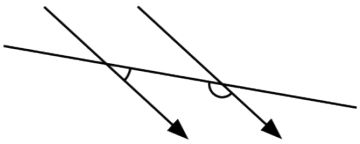 Supplementary angles formed by parallel lines crossed by a transversal are congruent.	**Vertical Angles** 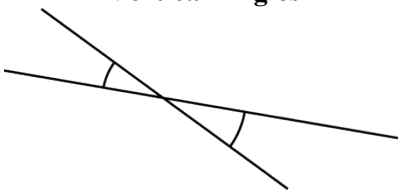 Vertical angles are congruent.	**Angles Around a Point** 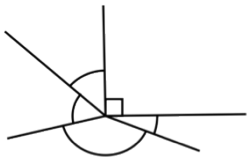 Angles around a point sum to 360°.
Alternate Interior Angles 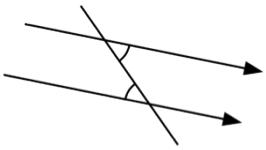 Alternate interior angles formed when parallel lines crossed by a transversal are congruent.	**Exterior Angles of a Polygon** 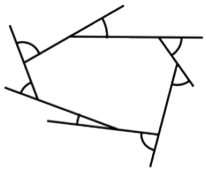 The sum of the exterior angles of a polygon is 360°.	**Interior Angles of a Polygon** 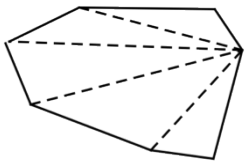 The sum of the interior angles of an n sided polygon is 180 (n-2)°.

© 2011 MARS University of Nottingham

Instructions for *The Pentagon Problem* (1)

Mrs. Morgan wrote a problem on the board.

"This pentagon has three equal sides at the top and two equal sides at the bottom. Three of the angles have a measure of 130°. Figure out the measure of the angles marked x and explain your reasoning."

Diagram is not drawn accurately.

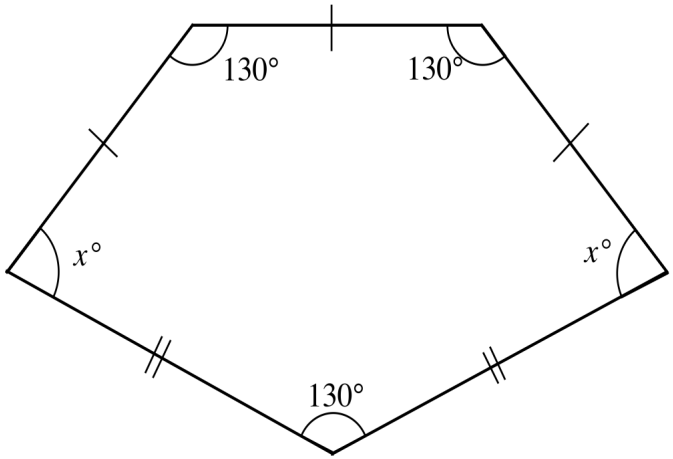

© 2011 MARS University of Nottingham

Instructions for *The Pentagon Problem* (2)

- **Four students in Mrs. Morgan's class came up with different methods for answering this problem.**
- **Their methods are shown on the worksheets.**
- **Use each student's method to calculate the measure of angle x.**
- **Write all your reasoning in detail.**
- **Use the *Geometrical Definitions and Properties* sheet to help.**

© 2011 MARS University of Nottingham

Instructions for *Sample Responses to Discuss*

Four students answered The Pentagon Problem using Annabel, Carlos, Brian and Diana's methods.

For each piece of work:

- **Explain whether the student's reasoning is correct and complete.**
- **Correct the solution if necessary.**
- **Use the method to calculate the measure of angle x.**
- **Make sure to write down all your reasoning in detail.**
- **Use the Geometrical Properties sheet to help.**

© 2011 MARS University of Nottingham

Erasmus used Annabel's method

Erasmus used Annabel's method

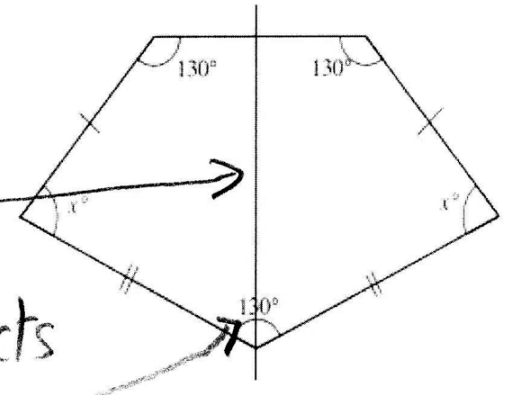

If you draw a perpendicular line down the middle it bisects the angle.

Angles in quadrilateral $130 + \frac{1}{2} \times 130 + x + 90 = 360$

© 2011 MARS University of Nottingham

Tomas used Carlos's method

Tomas

Tomas used Carlos's method

Exterior angles
Sum to 360°

$\frac{360}{5}$

$360 \div 5 = 72$

Angles on a line
sum to 180°

$72 + x = 180$

$x = 180 - 72$

$x = 108°$

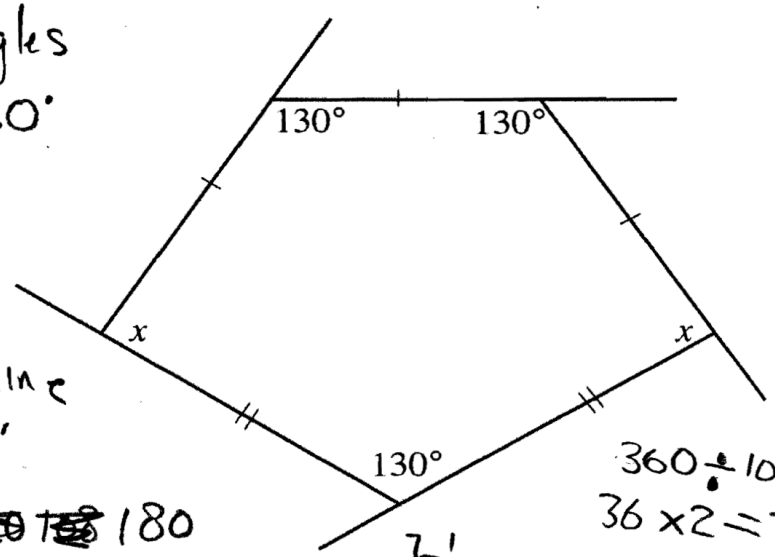

$360 \div 10 = 36$

$36 \times 2 = 72$

$180 - 72 = 108$

© 2011 MARS University of Nottingham

Katerina used Brian's method

Katerina used Brian's method

The horizontal line across makes a trapezoid and a triangle.

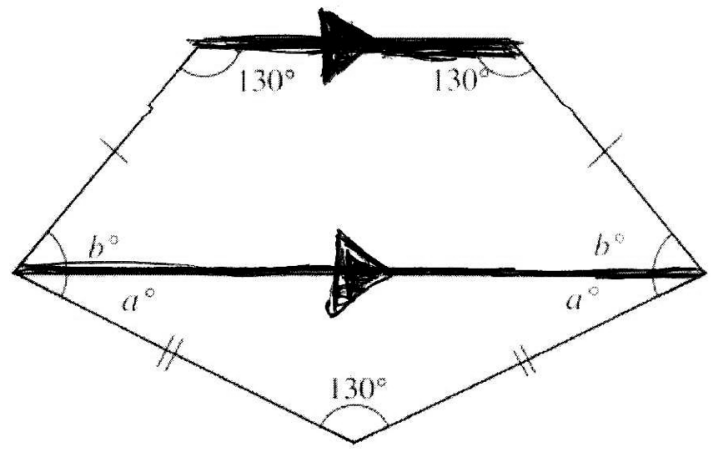

The triangle is isosceles because two sides are equal. $180 - 130 = 50°$

Consecutive angles in a quadrilateral add to 180°. $180 - 130 = 50°$.

© 2011 MARS University of Nottingham

Megan used Diana's method

Megan used Diane's method

Divide the pentagon into 3 triangles.
They are all isosceles triangles because AB = BC = CD and AE = BE = CE = DE.
$x = 65^\circ$ because angle $\widehat{EAB}$ = angle $\widehat{EBA}$.

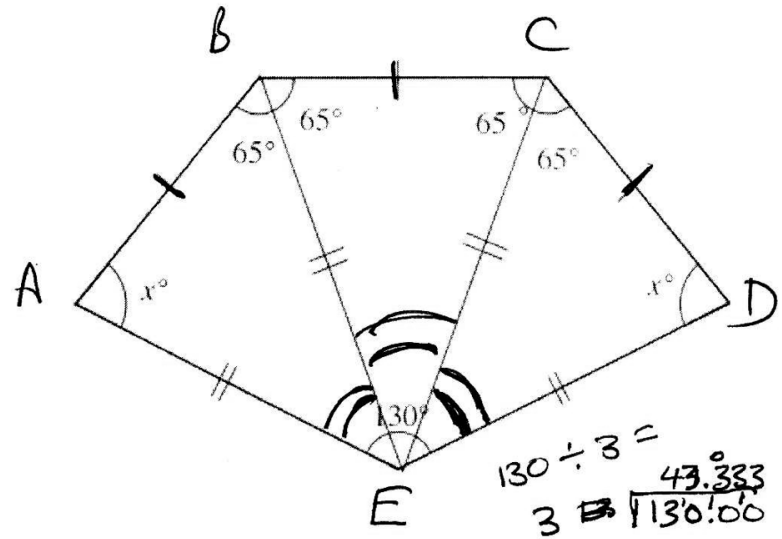

© 2011 MARS University of Nottingham

A semi-regular tessellation of pentagons and rhombuses

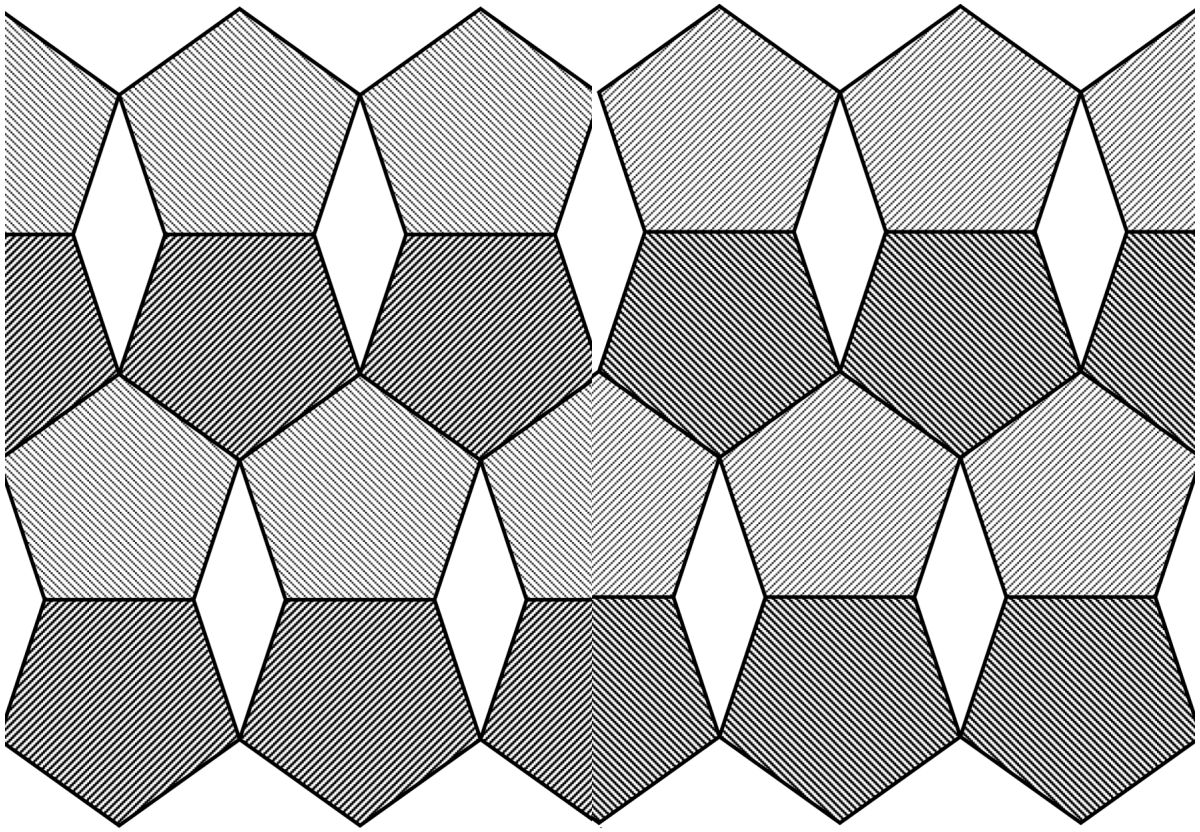

© 2011 MARS University of Nottingham